TRS Cable Gland
N-040

N Series Glands Aluminium

To suit Aluminium Series C Couplers

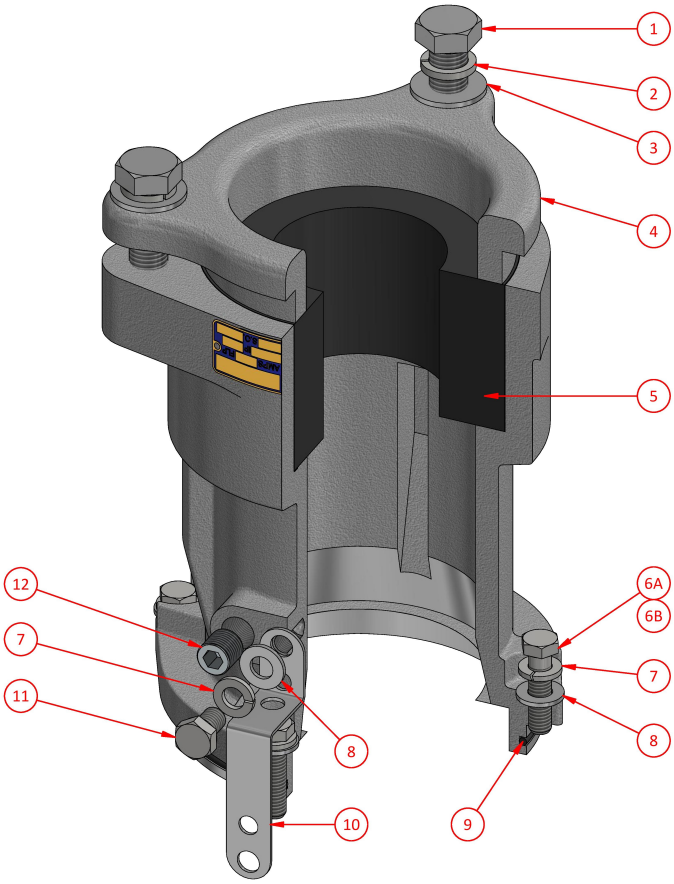

Ordering Procedure

1 Select complete Gland from Table 1

2 Select Grommet from Table 2

Table 1

Part Number	Description
N-040	TRS Cable Gland to suit 65.0-101.0mm O.D. Cable

Table 2

Silicone Grommets	
Part Number	**Cable Acceptance mm**
4666-73S	65.0-73.0
4666-80S	72.0-80.0
4666-87S	79.0-87.0
4666-94S	86.0-94.0
4666-101S	93.0-101.0

Spare Parts

#	Part Number	Description
1	AH113154	Screw M16 x 60 hex. head
2	AH009377	Spring Washer 5/8"
3	AH009282	Washer M16
4	3225A	Clamping Cap
5	See Table 2	Silicone Grommet
6A	AH006475	Screw 3/8" x 11/2" hex. head
6B	AH113115	Screw M10 x 40 hex. head
7	AH151011	Spring Washer M10
8	AH150011	Washer M10
9	AI018990	O-ring ID 145.65 x sect. 3.53
10	201-264-1	Earth Strap
11	AH113111	Screw M10 x 16 hex. head
12	AH014441	Filler Plug

Item 6A used on old A374SA & A474SA Couplers
Item 6B used on new A374A & A474A Couplers

Weight	5kg
Dimensions	L 190mm W 190mm H 280mm
Compliance	Non Hazardous Area Only
Materials	Aluminium

CMI Head Office NSW | (02) 9807 6155 | 18-20 Railway Road, Meadowbank NSW 2114 | nswsales@cmielectrical.com.au

CMI QLD-Brisbane
(07) 3863 0749
485A Zillmere Road,
Zillmere QLD 4034
southqldsales@cmielectrical.com.au

CMI QLD – Rockhampton
(07) 4921 0978
Shop 3 at 76 Hollingsworth Street,
North Rockhampton Qld 4701
northqldsales@cmielectrical.com.au

CMI VIC
(03) 9532 1233
3 Dissik Street,
Cheltenham VIC 3192
vicsales@cmielectrical.com.au

CMI WA
(08) 9358 1788
36 Division Street,
Welshpool WA 6106
wasales@cmielectrical.com.au