Receptacle Gland & Bracket
AV334B4

300 Amp Series
3300V

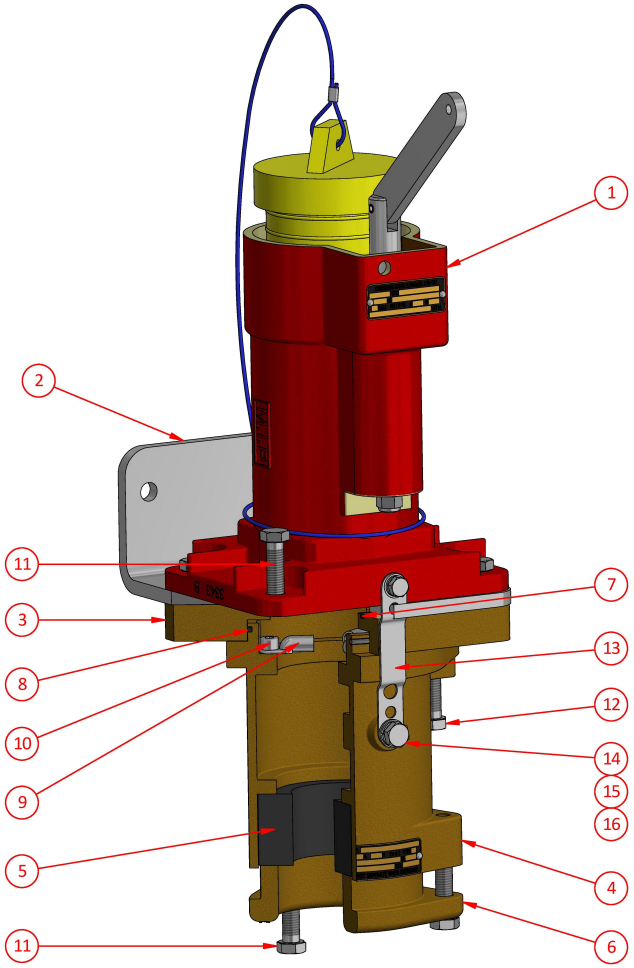

Weight	37kg
Dimensions	L 390mm W 340mm H 340mm
Compliance	Explosion protected to AS/NZS1299 & IEC60079 Series
Materials	Manganese Bronze / Brass / PTFE
IP Rating	IP66/68

Ordering Procedure

1	Select complete Receptacle Gland & Bracket from Table 1
2	Select Phase Thimble from Table 2 (3 Required)
3	Select Grommet from Table 3

Table 1

Part Number	Description	Colour
AV334B4	3300V Restrained Receptacle Gland & Bracket	Red

NB: Receptacle Gland & Bracket supplied with Pilot Thimble

Table 2

Phase Thimble - c/w screw AH151026 & O-ring AI019017

Part Number	CSA	ID mm	Utilux Die No.
F-4606-1	35	8.4	38-92 Cu
F-4606-2	50	9.5	38-104 Cu
F-4606-3	70	11.2	38-115 Cu
F-4606-4	95	13.4	38-142 Cu
F-4606-5	120	15.5	38-165 Cu
F-4606-6	150	16.3	38-183 Cu
F-4606-7	185	18.4	38-200 Cu
F-4606-8	185	21.0	Solder Only

NB: CSA is indicative only. Use ID for thimble selection

Table 3

Neoprene Grommets

Part Number	Cable Acceptance mm
3394-58	53.0-58.0
3394-61	56.0-61.0
3394-63	59.0-63.0
3394-66	62.0-66.0
3394-69	65.0-69.0
3394-72	68.0-72.0
3394-75	71.0-75.0
3394-78	74.0-80.0
3394-81	77.0-81.0
3394-84	80.0-84.0
3394-87	83.0-87.0

Spare Parts

#	Part Number	Description
1	AG334B	3300V Restrained Receptacle
2	AV3	Mounting Bracket
3	F-3370	Spacer Plate c/w O-ring AI019042
4	F-3393T	No.4 TRS Cable Gland to suit 53.0-87.0mm O.D. Cable
5	See Table 3	Neoprene Grommet
6	3399B	Clamping Cap
7	AI019042	O-ring ID 101.19 x sect. 3.53
8	AI019010	O-ring ID 120.24 x sect. 3.53
9	AH017206	Earth Lug
10	AH115115	Screw M6 x 10 button head
11	AH113135	Screw M12 x 50 hex. head
12	AH113134	Screw M12 x 35 hex. head
13	201-264-1	Earth Strap
14	AH113111	Screw M10 x 16 hex. head
15	AH151011	Spring Washer M10
16	AH150011	Washer M10

NB: See AG334B Page for Receptacle Spare Parts